TORMAX® AUTOMATIC

TX9600TL MANUAL INTENSIVE CARE UNIT (I.C.U.)

OUTSWING SINGLE SOLH

JOB NAME: _____ DATE: _____

DOOR LOCATION: _____ DOOR NO: _____ SHEET ___ OF ___

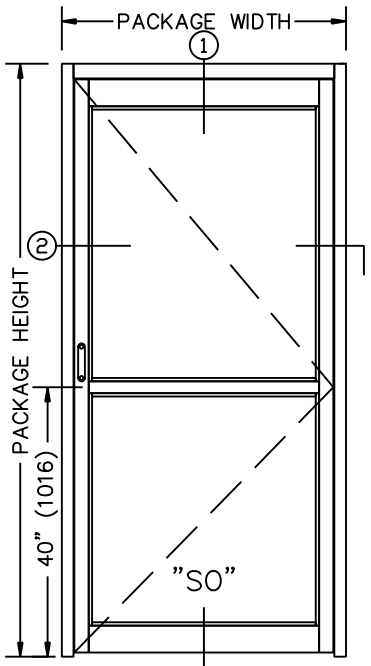

ELEVATION

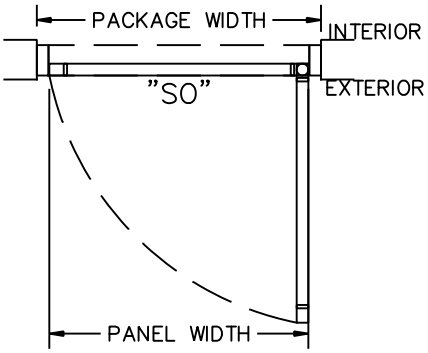

PLAN

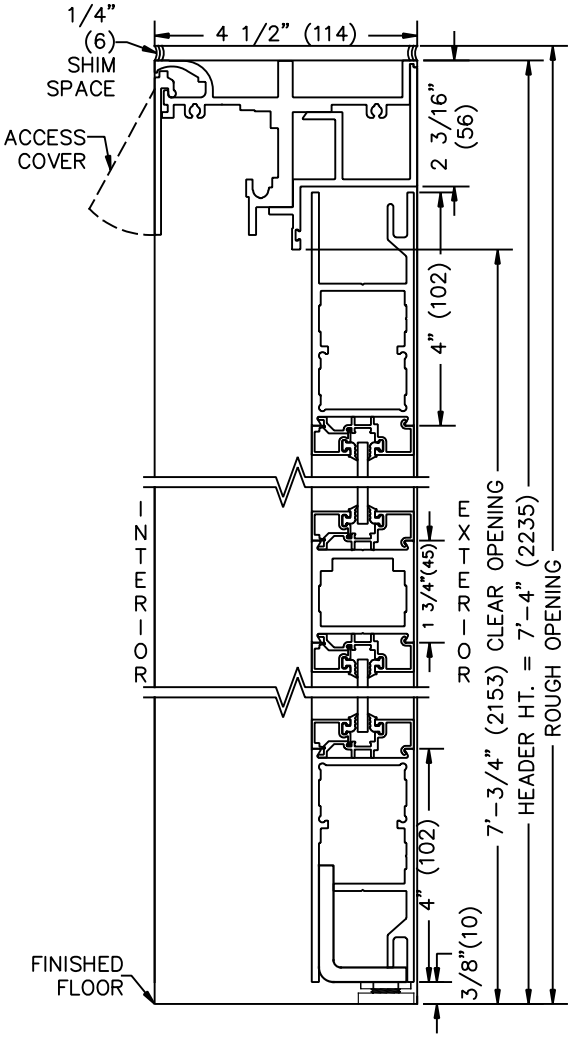

1 VERTICAL SECTION

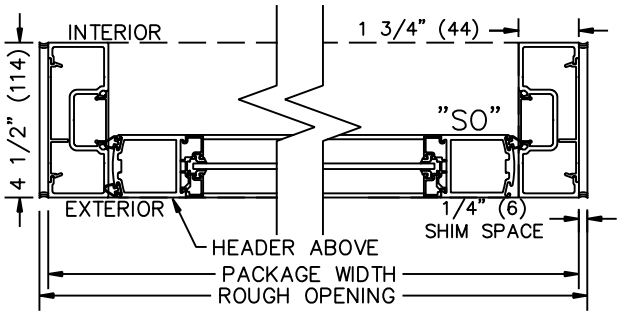

2 HORIZONTAL SECTION

NOTES:
1. DETAILS NOT TO SCALE.
2. DOOR PACKAGES ARE INDIVIDUALLY ENGINEERED TO FIT YOUR JOB REQUIREMENTS.